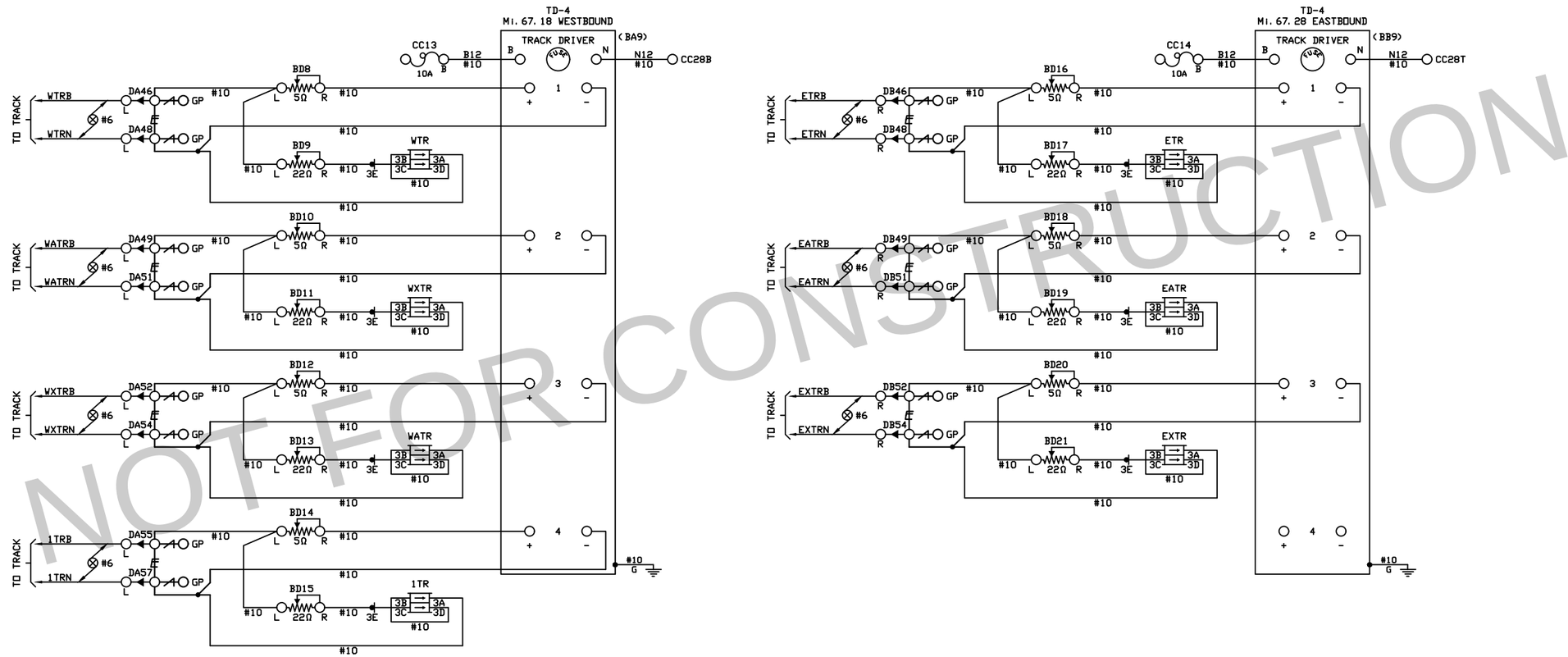

NOTES

1) E DENOTES EQUALIZER

2) DENOTES LIGHTNING ARRESTER

3) GP DENOTES GROUND PLANE

3) DENOTES TWISTED PAIRS.

NOT FOR CONSTRUCTION

B.M.
ELEV.

CONSTRUCTION COMPLETION DATE: YYYY MM DD

NO.	REVISIONS	DATE	BY
0	ISSUED FOR TENDER	2020-01-31	WSP

wsp

DESIGNED BY	JAB(WSP)	CHECKED BY	HH(WSP)
DRAWN BY	JAB(WSP)	APPROVED BY	RY(WSP)
SCALE: HORIZONTAL	NTS	RELEASED FOR CONSTRUCTION	
VERTICAL	NTS		
DATE	2020 01 31	DATE	YYYY-MM-DD

PLOT DATE: 2020 01 31

ENGINEER'S SEAL

CONSULTANT DRAWING NUMBER

GWWD067.23PA005_SW

BID OPPORTUNITY: XXX-20XX
CONTRACT NUMBER: X

Winnipeg

THE CITY OF WINNIPEG

WATER AND WASTE DEPARTMENT
ENGINEERING DIVISION

THE GREATER WINNIPEG WATER DISTRICT RAILWAY
PTH 1 HIGHWAY CROSSING WARNING SYSTEMS Mi.67.18 & Mi.67.28

TRACKS CIRCUITS

SHEET 5 OF 20

CITY DRAWING NUMBER

1-0754R-E0005-001

FILE PATH: C:\Users\cajb069559\OneDrive - WSP O365\My Documents\5 - Winnipeg Crossings\Design\CAD\
FILE NAME: GWWD067.23PA005_SW.dwg